EMITTER-STABILIZED

BJT DC BIASING

prepared by:

Gyro A. Madrona

Electronics Engineer

GRADING SYSTEM

FINAL GRADE

30%

PRELIM

30%

MIDTERM

40%

ENDTERM

TERM GRADE

50%

WEEKLY

50%

EXAM

100%

LABORATORY

PENALTY

0

ABSENT

3

45-min LATE

7 max

15-min LATE

TOPIC OUTLINE

Emitter-Stabilized Bias Circuit

- Base-Emitter Loop
- Collector-Emitter Loop
- Load Line Analysis

EMITTER-STABILIZED BIAS CIRCUIT

EMITTER-STABILIZED BIAS CIRCUIT

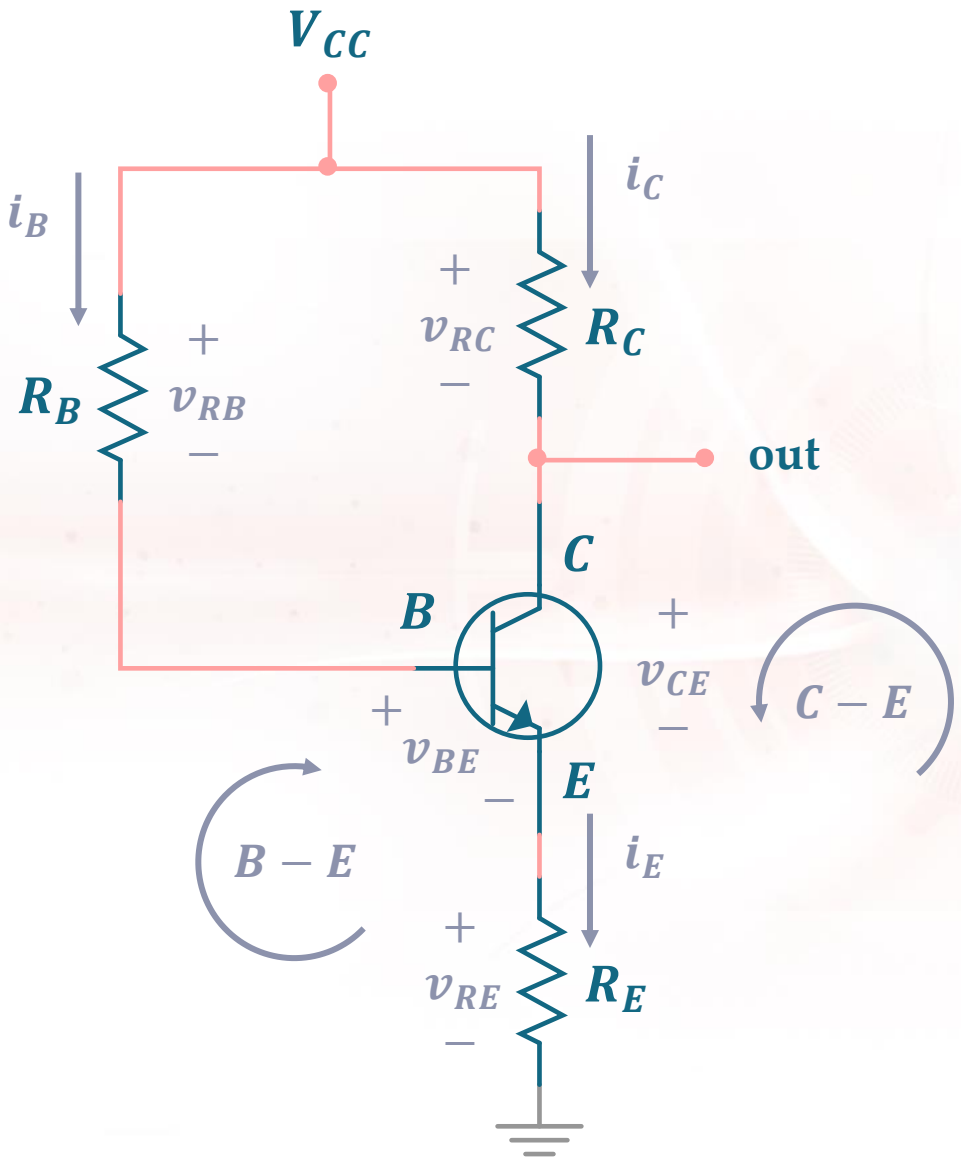

BASE-EMITTER LOOP

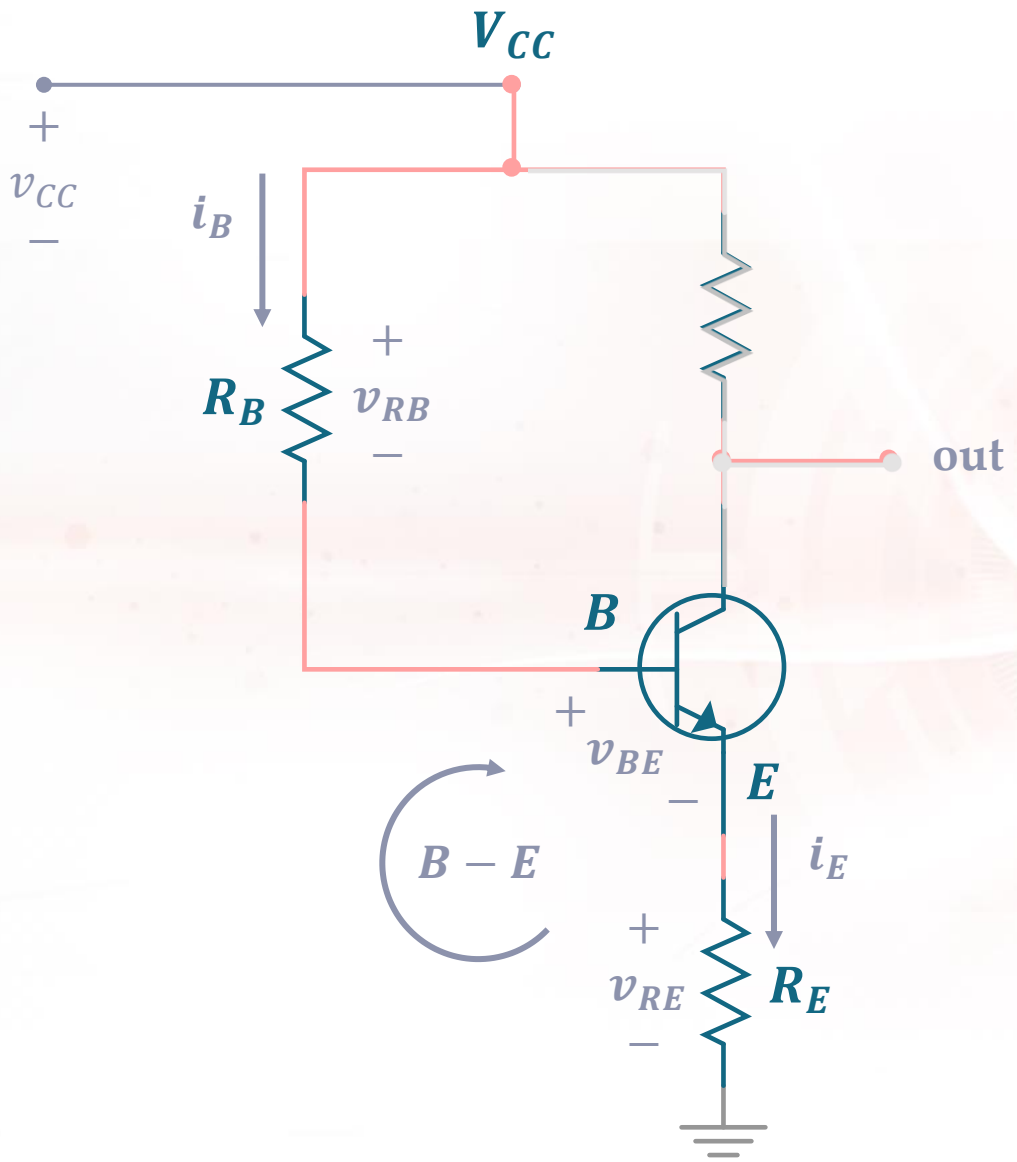

KVL @$B - E$,

$$-v_{CC} + v_{RB} + v_{BE} + v_{RE} = 0$$

$$v_{RB} + v_{RE} = v_{CC} - v_{BE}$$

$$i_B R_B + i_E R_E = v_{CC} - v_{BE}$$

$$i_E = i_B + i_C$$

$$i_E = i_B + \beta i_B$$

$$i_B = i_B(\beta + 1)$$

BASE-EMITTER LOOP

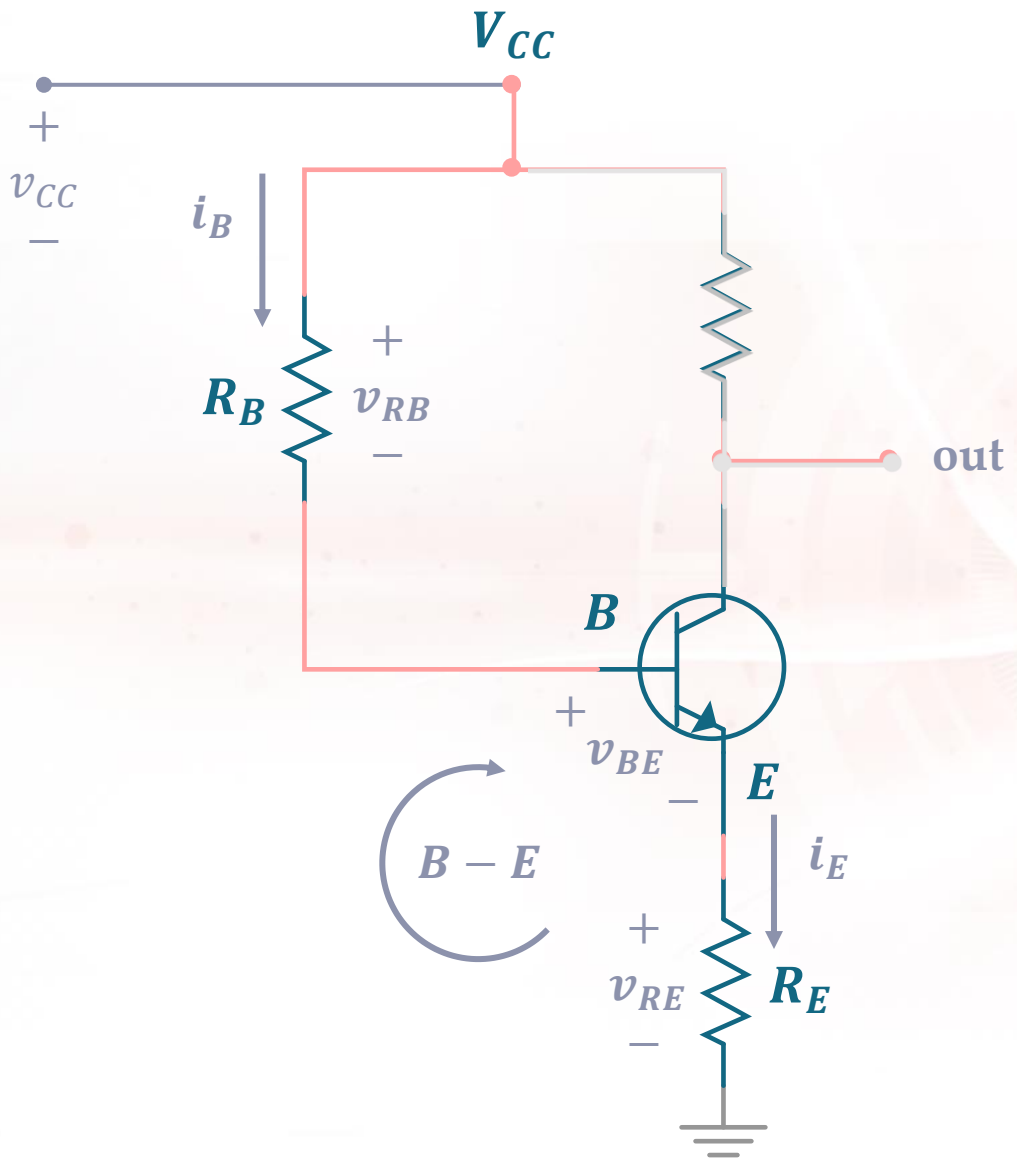

KVL @$B - E$,

$$-v_{CC} + v_{RB} + v_{BE} + v_{RE} = 0$$

$$v_{RB} + v_{RE} = v_{CC} - v_{BE}$$

$$i_B R_B + i_E R_E = v_{CC} - v_{BE}$$

$$i_B R_B + i_B(\beta + 1)R_E = v_{CC} - v_{BE}$$

$$i_B(R_B + (\beta + 1)i_E) = v_{CC} - v_{BE}$$

$$i_B = \frac{v_{CC} - v_{BE}}{R_B + (\beta + 1)R_E}$$

BASE-EMITTER LOOP

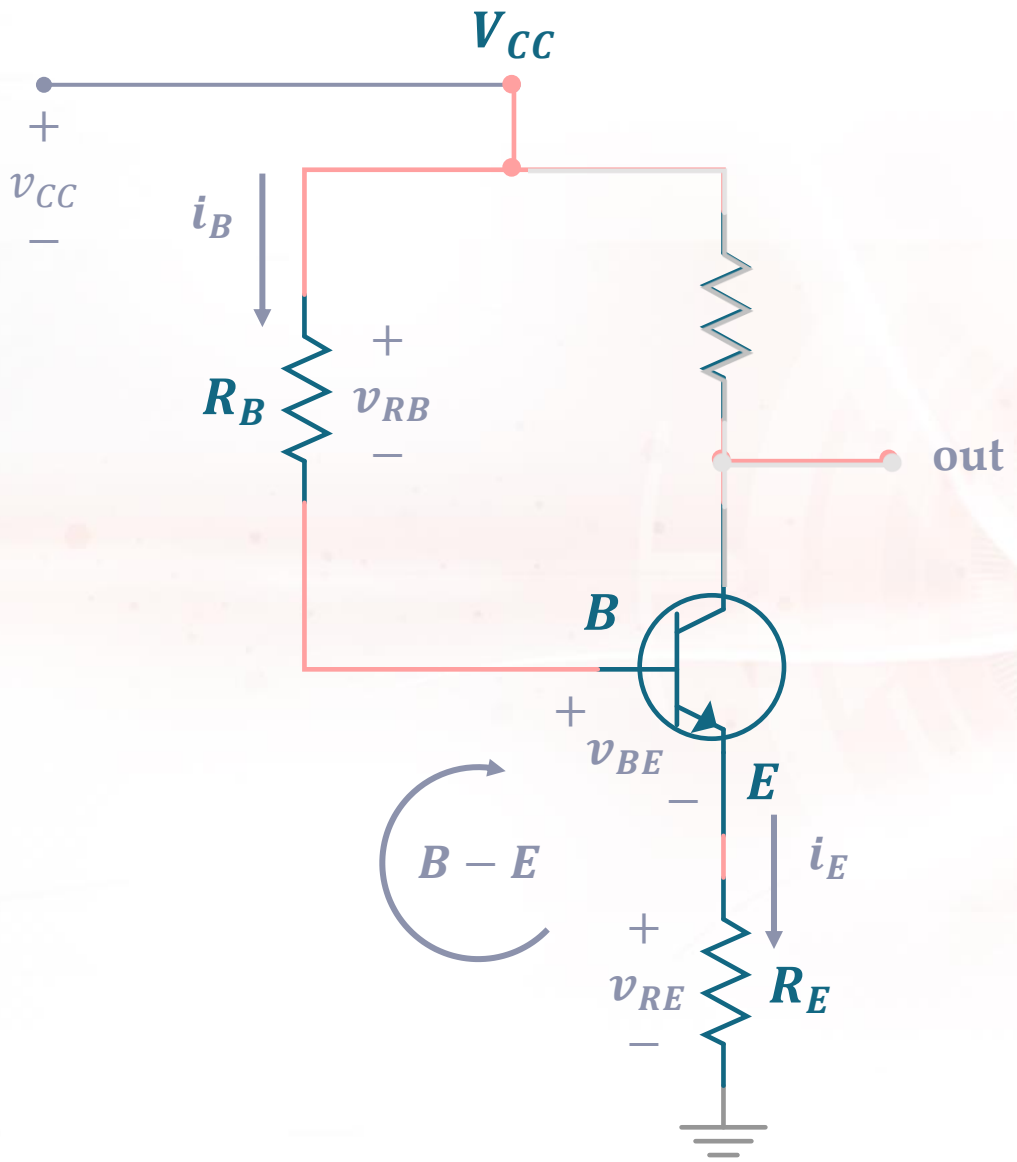

KVL @$B - E$,

$$-v_{CC} + v_{RB} + v_{BE} + v_{RE} = 0$$

$$v_{RB} + v_{RE} = v_{CC} - v_{BE}$$

$$i_B R_B + i_E R_E = v_{CC} - v_{BE}$$

$$i_B R_B + i_B(\beta + 1)R_E = v_{CC} - v_{BE}$$

$$i_B(R_B + (\beta + 1)i_E) = v_{CC} - v_{BE}$$

$$i_B = \frac{v_{CC} - v_{BE}}{R_B + (\beta + 1)R_E}$$

emitter-stabilized

COLLECTOR-EMITTER LOOP

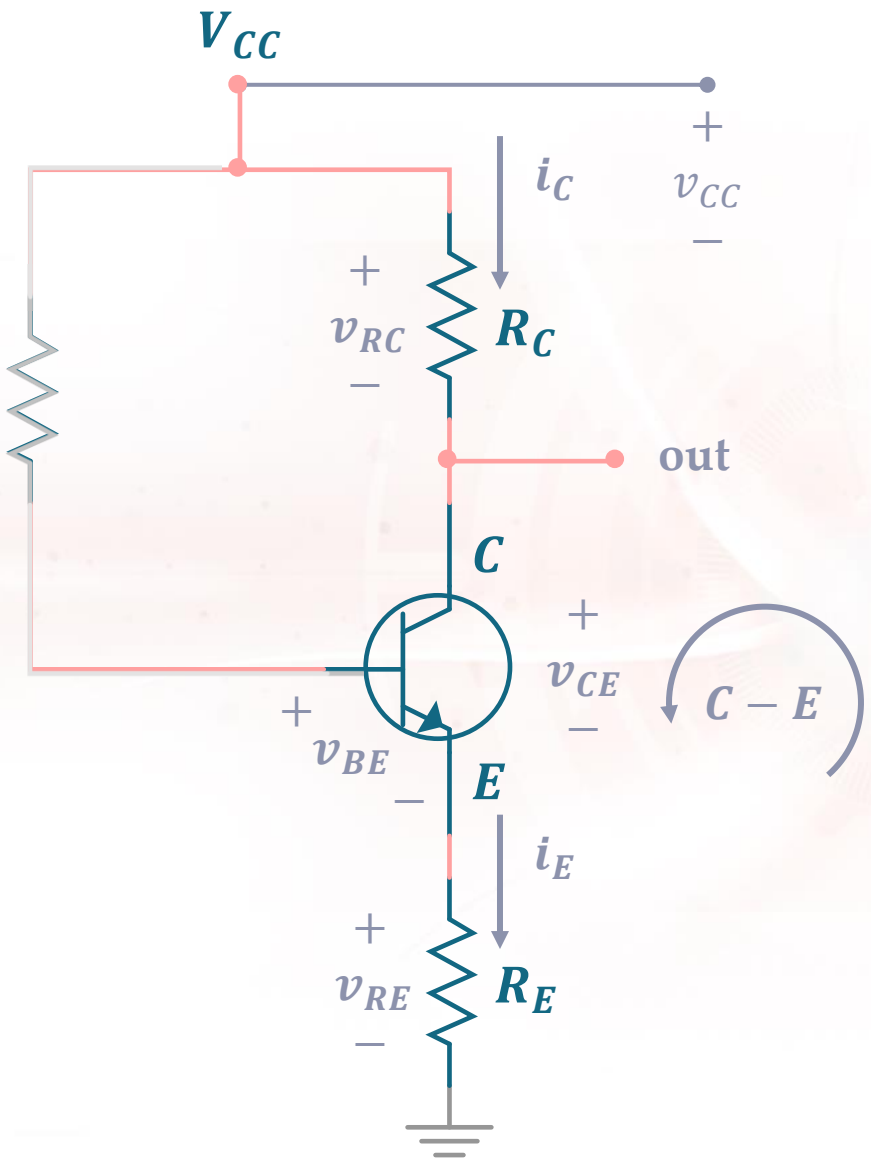

KVL @$C-E$,

$$-v_{CC} + v_{RC} + v_{CE} + v_{RE} = 0$$

$$v_{CE} = v_{CC} - v_{RC} - v_{RE}$$

$$v_{CE} = v_{CC} - i_C R_C - i_E R_E$$

$$i_C \approx i_E$$

$$v_{CE} = v_{CC} - i_C(R_C + R_E)$$

COLLECTOR-EMITTER LOOP

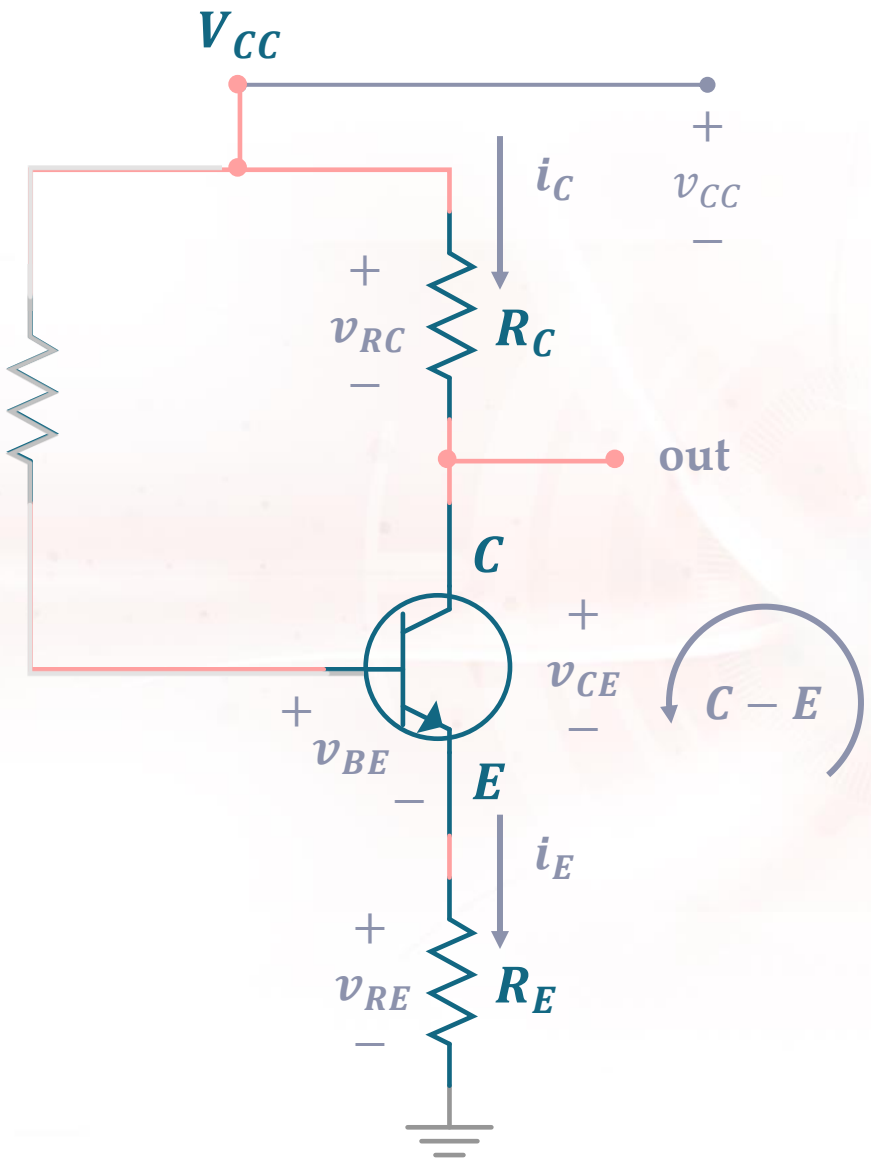

KVL @$C-E$,

$$-v_{CC} + v_{RC} + v_{CE} + v_{RE} = 0$$

$$v_{CE} = v_{CC} - v_{RC} - v_{RE}$$

$$v_{CE} = v_{CC} - i_C R_C - i_E R_E$$

$$i_C \approx i_E$$

$$v_{CE} = v_{CC} - i_C(R_C + R_E)$$

emitter-stabilized

For the given **emitter-stabilized bias** network, determine:

- Base current, i_B
- Collector current, i_{CQ}
- Collector-Emitter voltage, v_{CE}
- Collector voltage, v_C
- Load Line Analysis
  - Saturation current, $i_{C(sat)}$
  - Cutoff voltage, $v_{CE(cutoff)}$

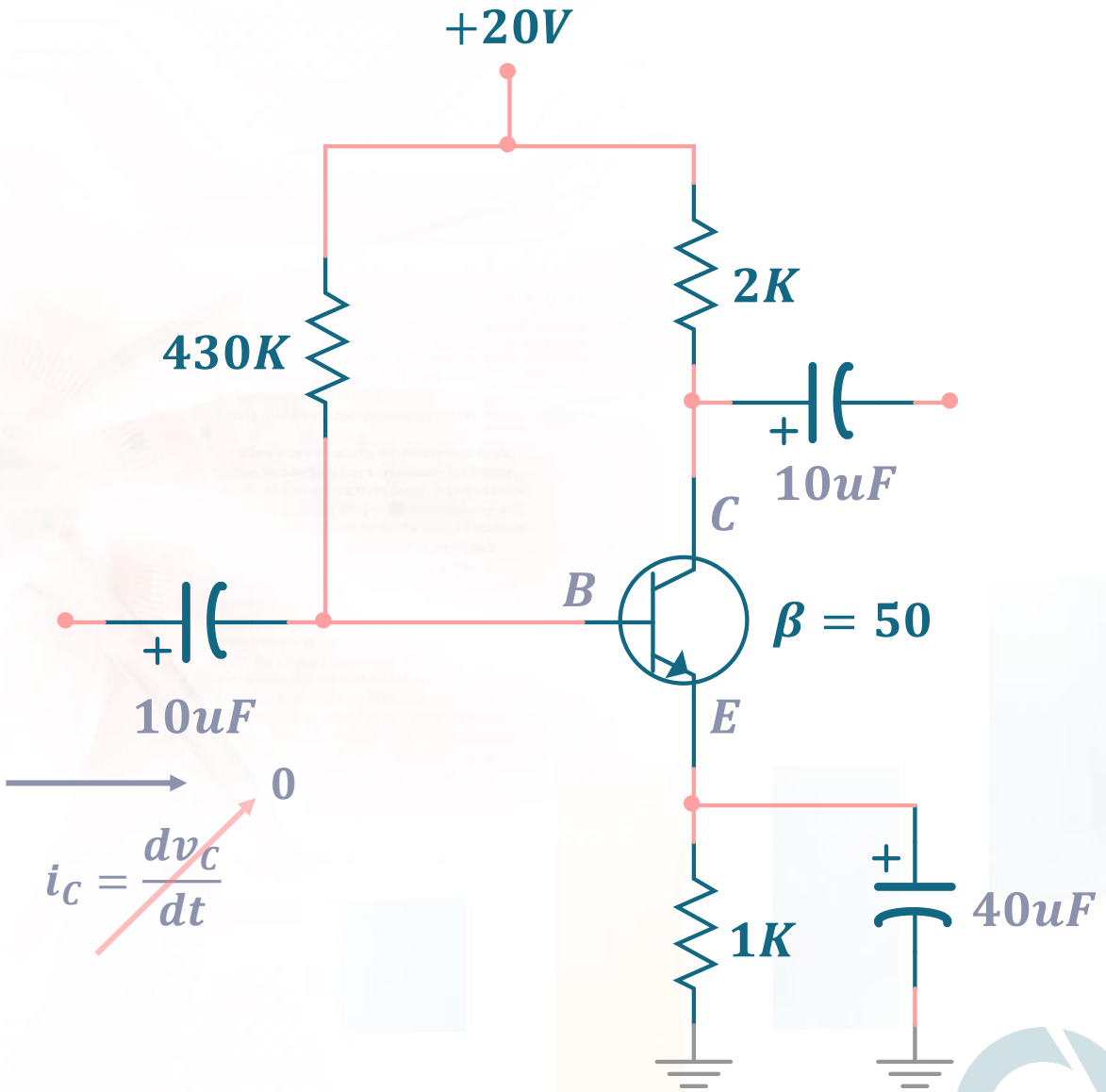

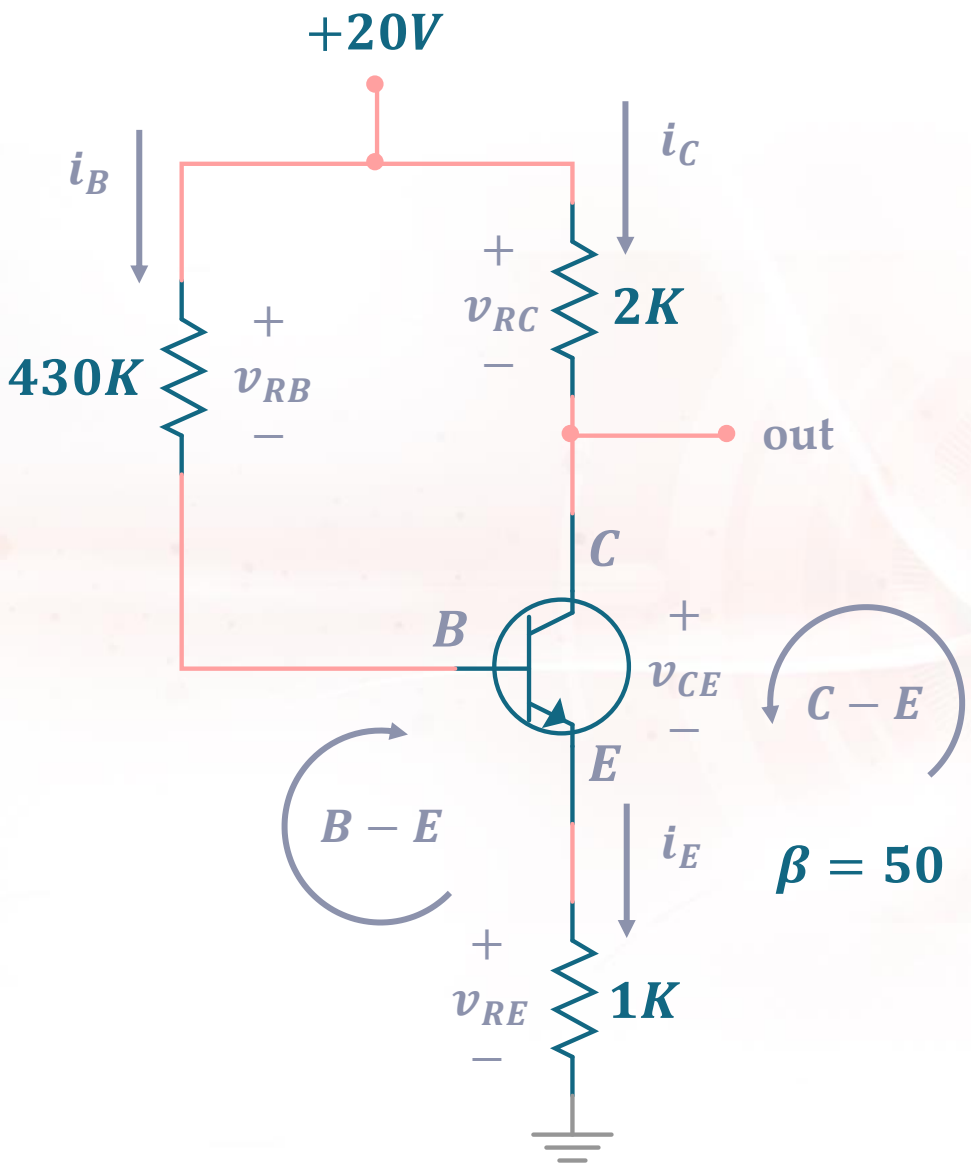

$\beta = 50$

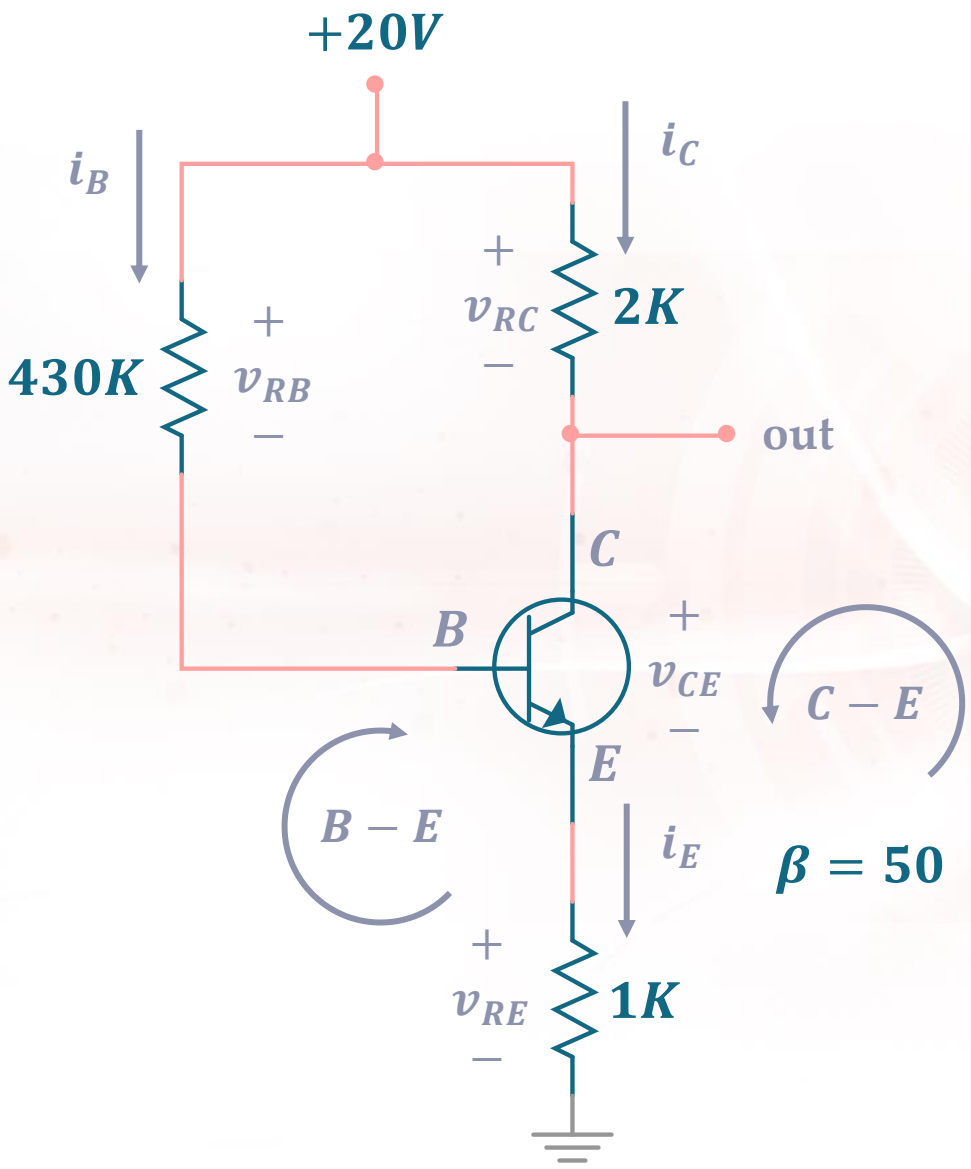

KVL @$B - E$,

$$-v_{CC} + v_{RB} + v_{BE} + v_{RE} = 0$$

$$v_{RB} + v_{RE} = v_{CC} - v_{BE}$$

$$i_B R_B + i_E R_E = v_{CC} - v_{BE}$$

$$i_B R_B + i_B(\beta + 1)R_E = v_{CC} - v_{BE}$$

$$i_B(R_B + (\beta + 1)i_E) = v_{CC} - v_{BE}$$

$$i_B = \frac{v_{CC} - v_{BE}}{R_B + (\beta + 1)R_E}$$

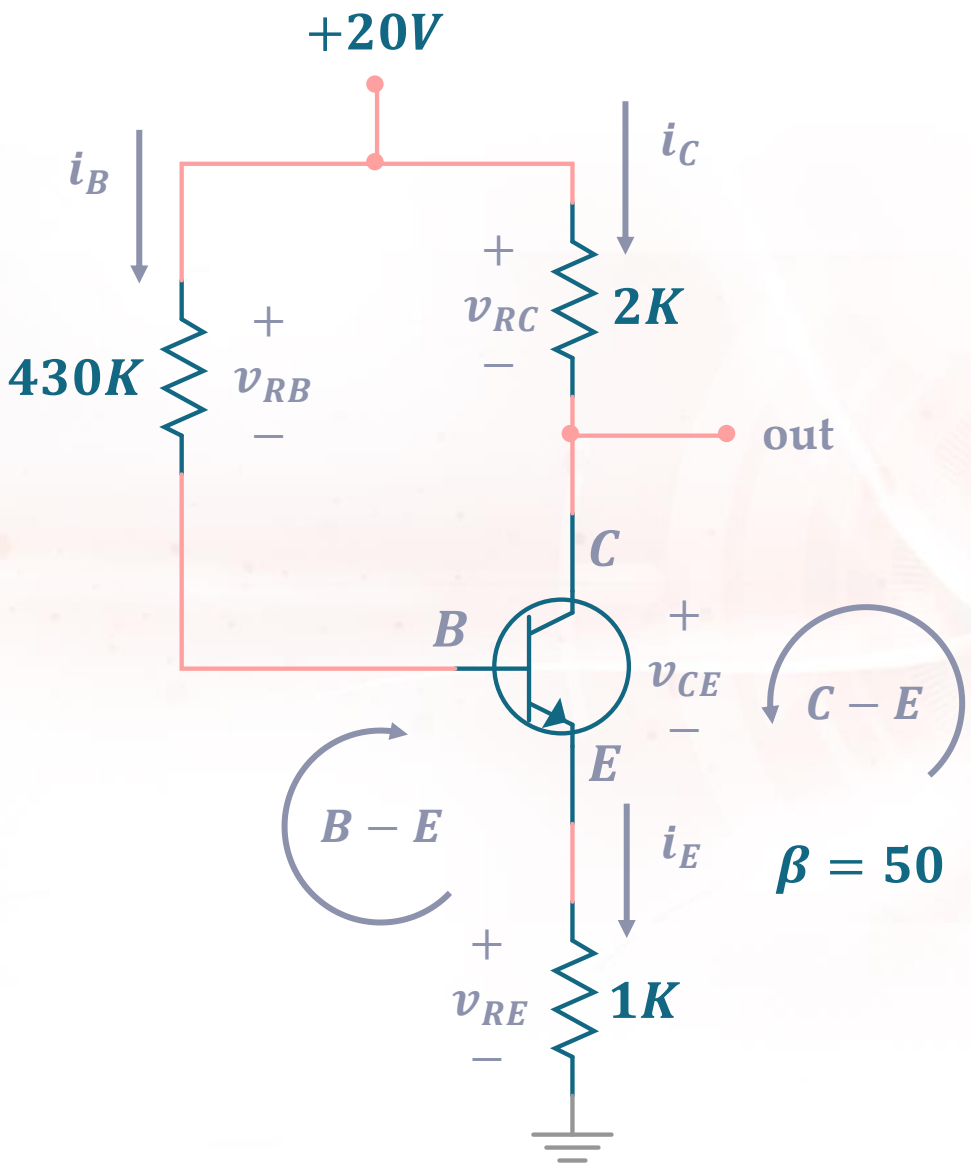

$\beta = 50$

KVL @$B - E$,

$$i_B = \frac{v_{CC} - v_{BE}}{R_B + (\beta + 1)R_E}$$

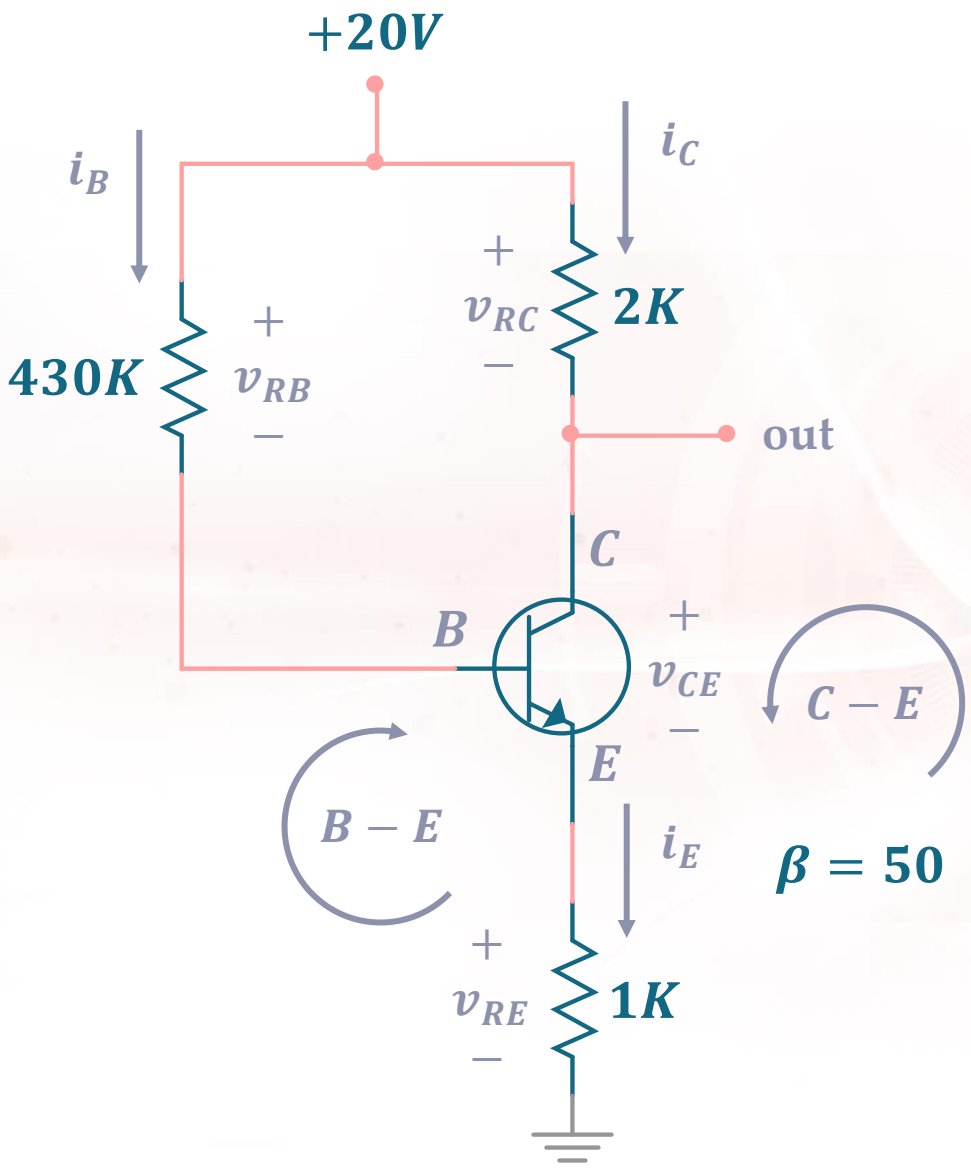

KVL @$B - E$,

$$i_B = \frac{v_{CC} - v_{BE}}{R_B + (\beta + 1)R_E}$$

$$i_B = \frac{20 - 0.7}{430K + (50 + 1)1K}$$

$$\boxed{i_B = 40.12\ uA}$$

ans

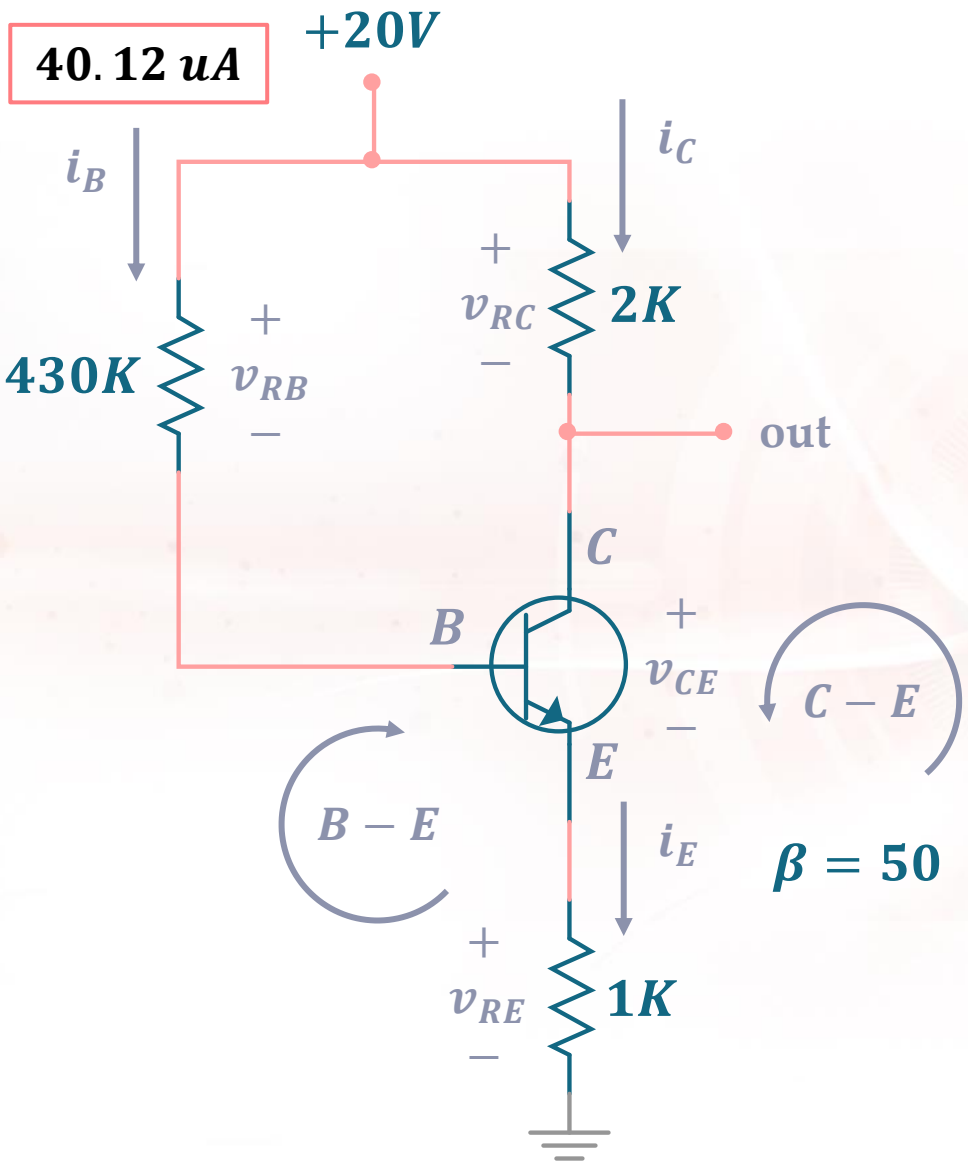

Current Gain,

$$i_C = \beta i_B$$

$$i_C = 50(40.12\ uA)$$

$$\boxed{i_{CQ} = 2\ mA}$$

ans

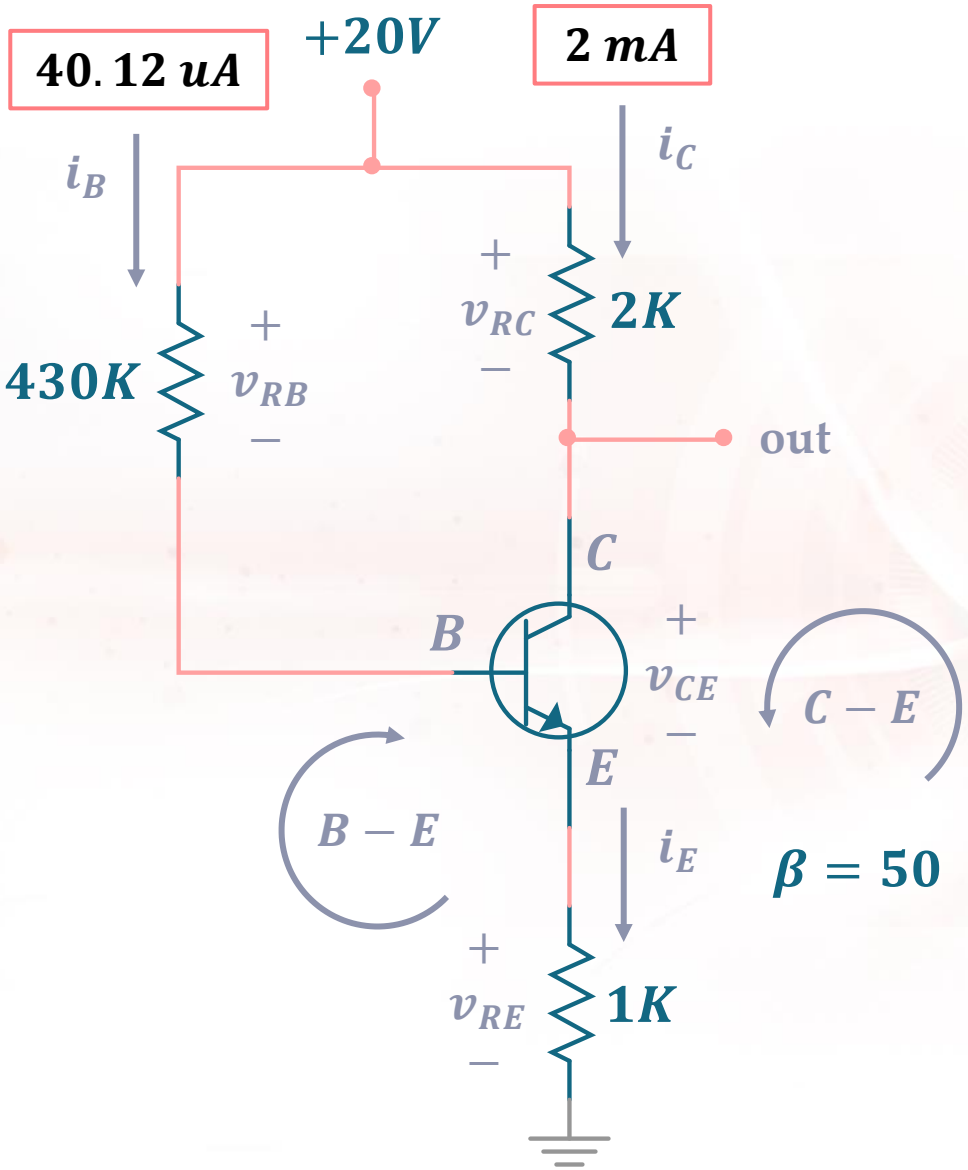

KVL @$C - E$,

$$-v_{CC} + v_{RC} + v_{CE} + v_{RE} = 0$$

$$v_{CE} = v_{CC} - v_{RC} - v_{RE}$$

$$v_{CE} = v_{CC} - i_C R_C - i_E R_E$$

$$i_C \approx i_E$$

$$v_{CE} = v_{CC} - i_C(R_C + R_E)$$

$$v_{CE} = 20 - 2mA(2K + 1K)$$

$$\boxed{v_{CE} = 14\ V}$$

ans

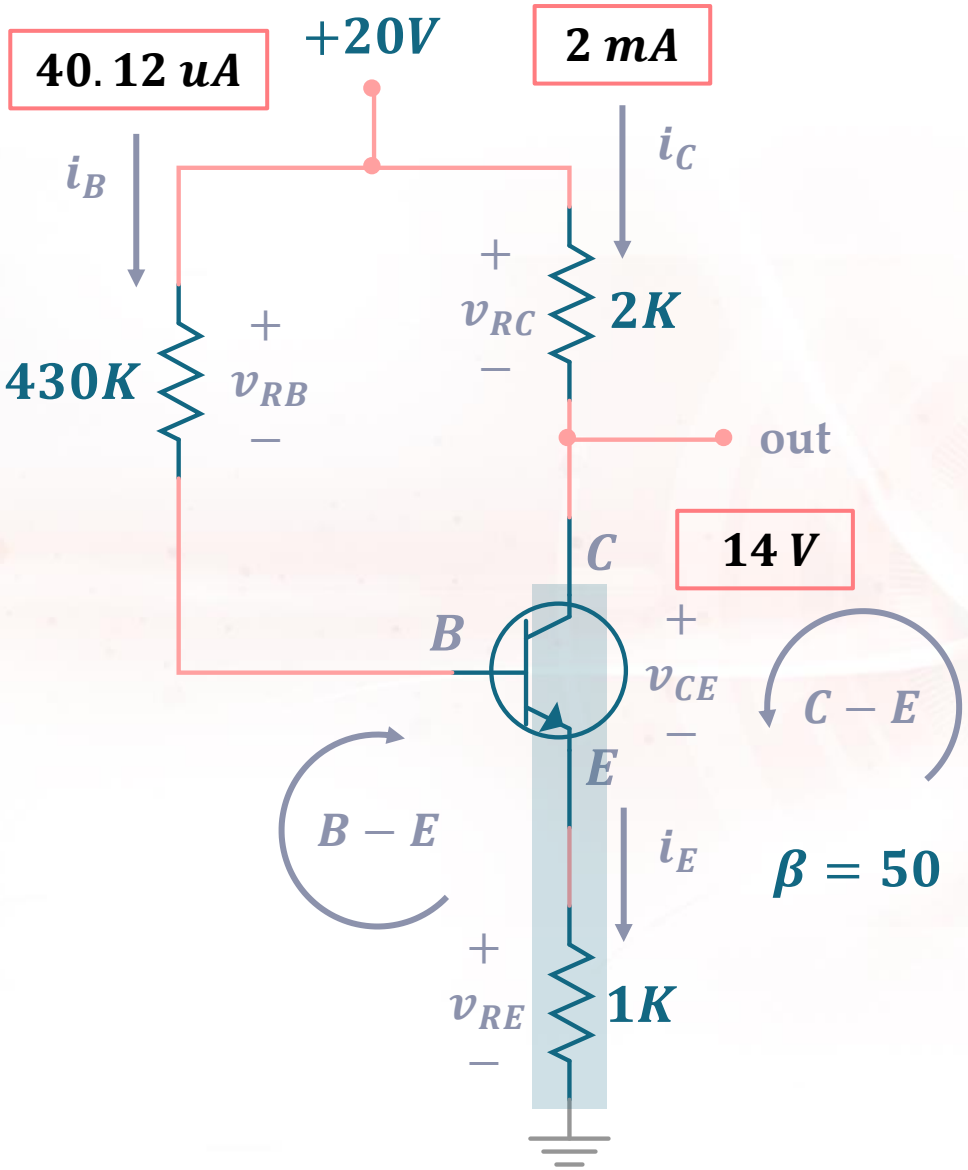

KVL @C − E,

$$-v_{CC} + v_{RC} + v_C = 0$$

$$v_C = v_{CC} - v_{RC}$$

$$v_C = v_{CC} - i_C R_C$$

$$v_C = 20 - 2mA(2K)$$

$$\boxed{v_C = 16\,V}$$

ans

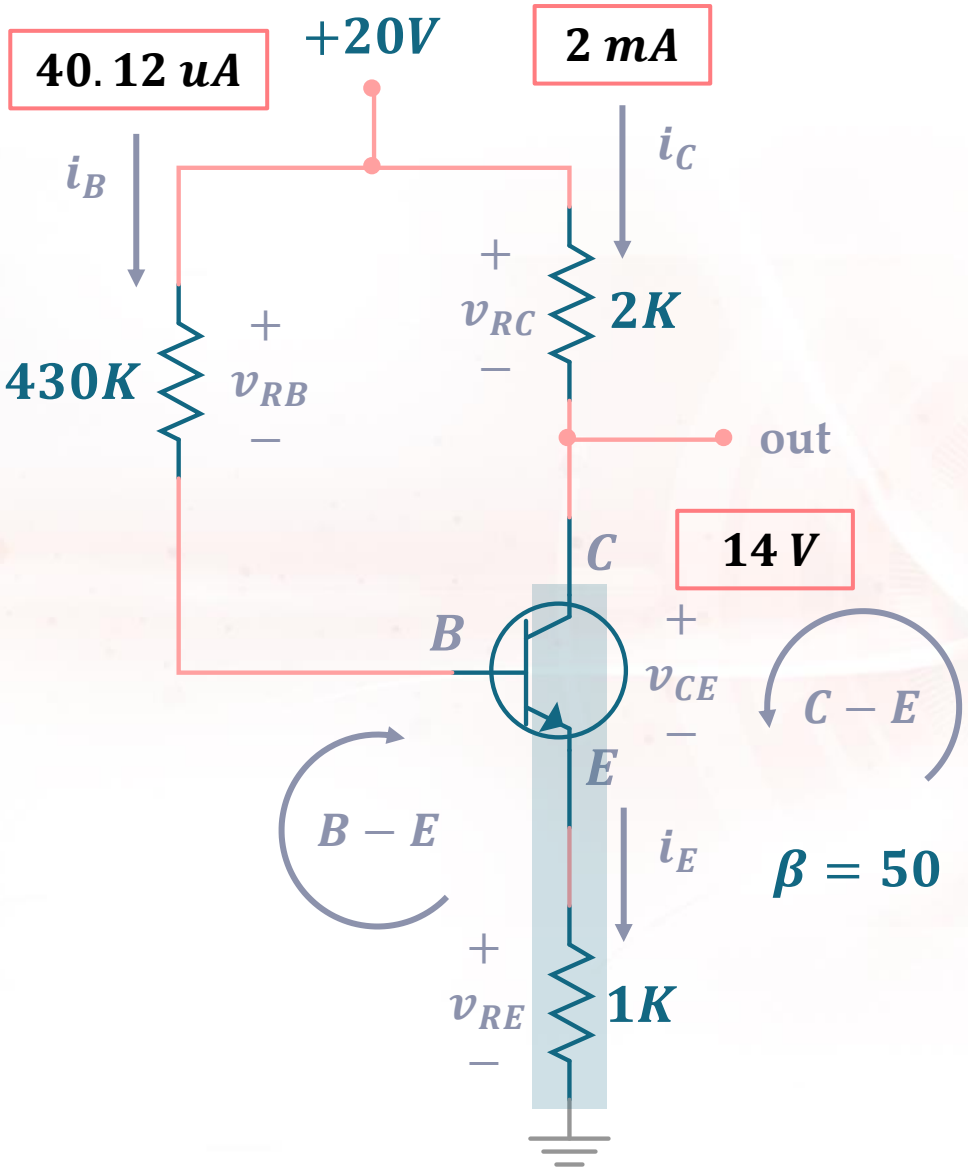

Node Analysis Method,

$$v_{CE} = v_C - v_E$$

$$v_C = v_{CE} + v_E$$

$$v_C = v_{CE} + i_E R_E$$

$$v_C = 14 + 2mA(1K)$$

$$\boxed{v_C = 16\ V}$$

ans

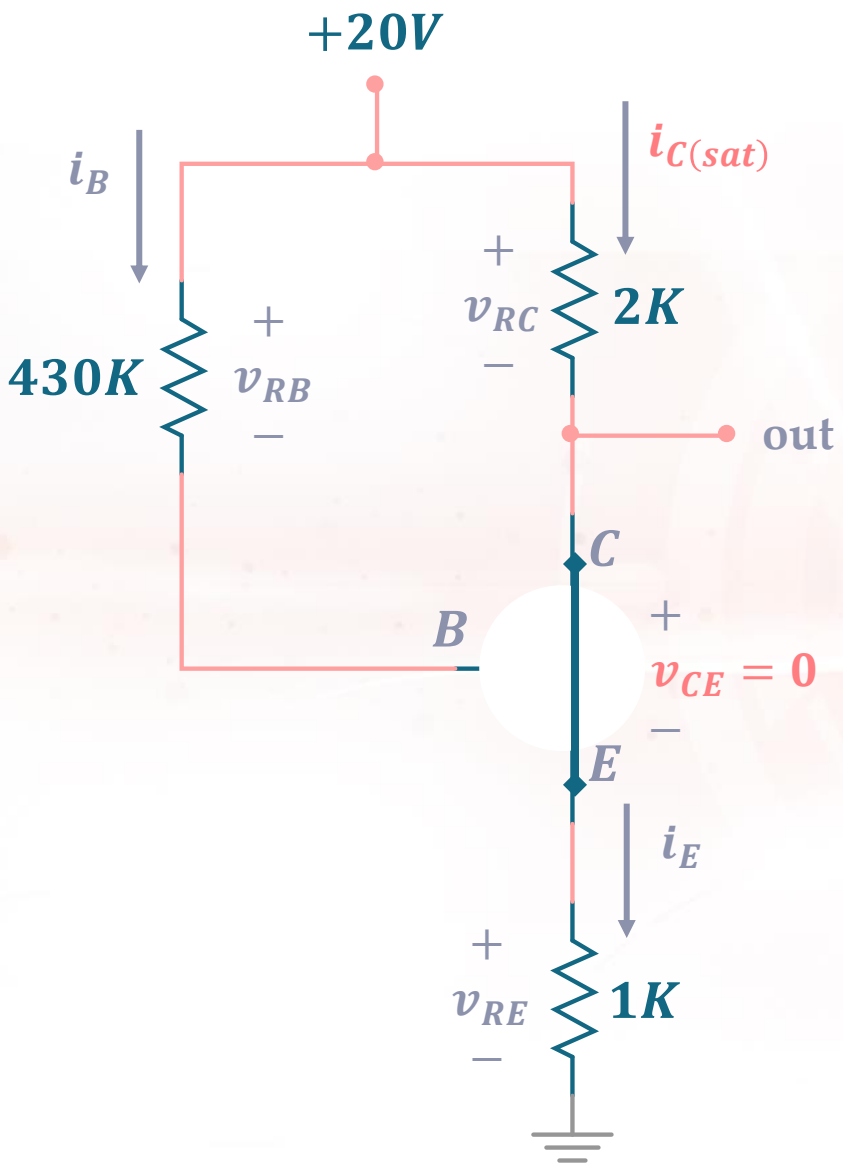

Mental Short,

$$i_{C(sat)} = \frac{v_{CC}}{R_C + R_E}$$

$$i_{C(sat)} = \frac{20}{2K + 1K}$$

$$\boxed{i_{C(sat)} = 6.67\ mA}$$

ans

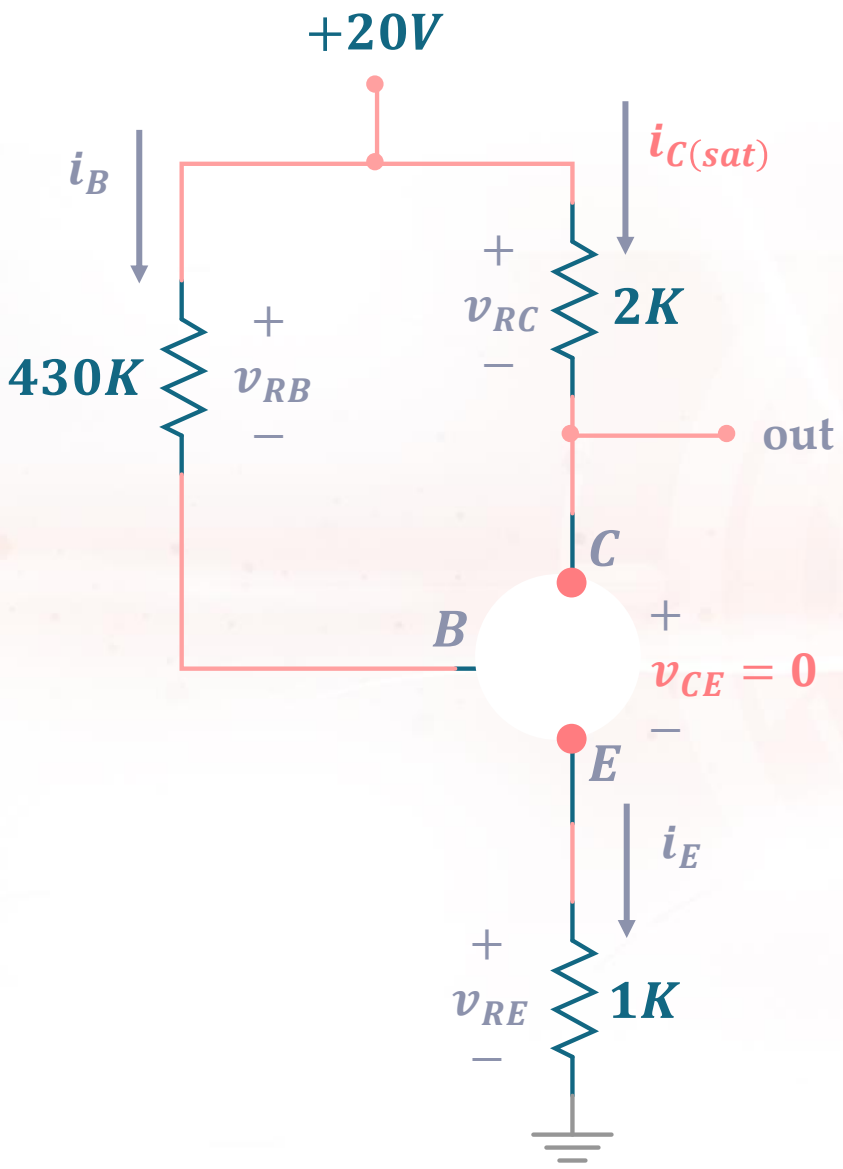

Mental Open,

$$v_{CE(cutoff)} = v_{CC}$$

$$\boxed{v_{CE(cutoff)} = 20\ V}$$

ans

LOAD LINE ANALYSIS

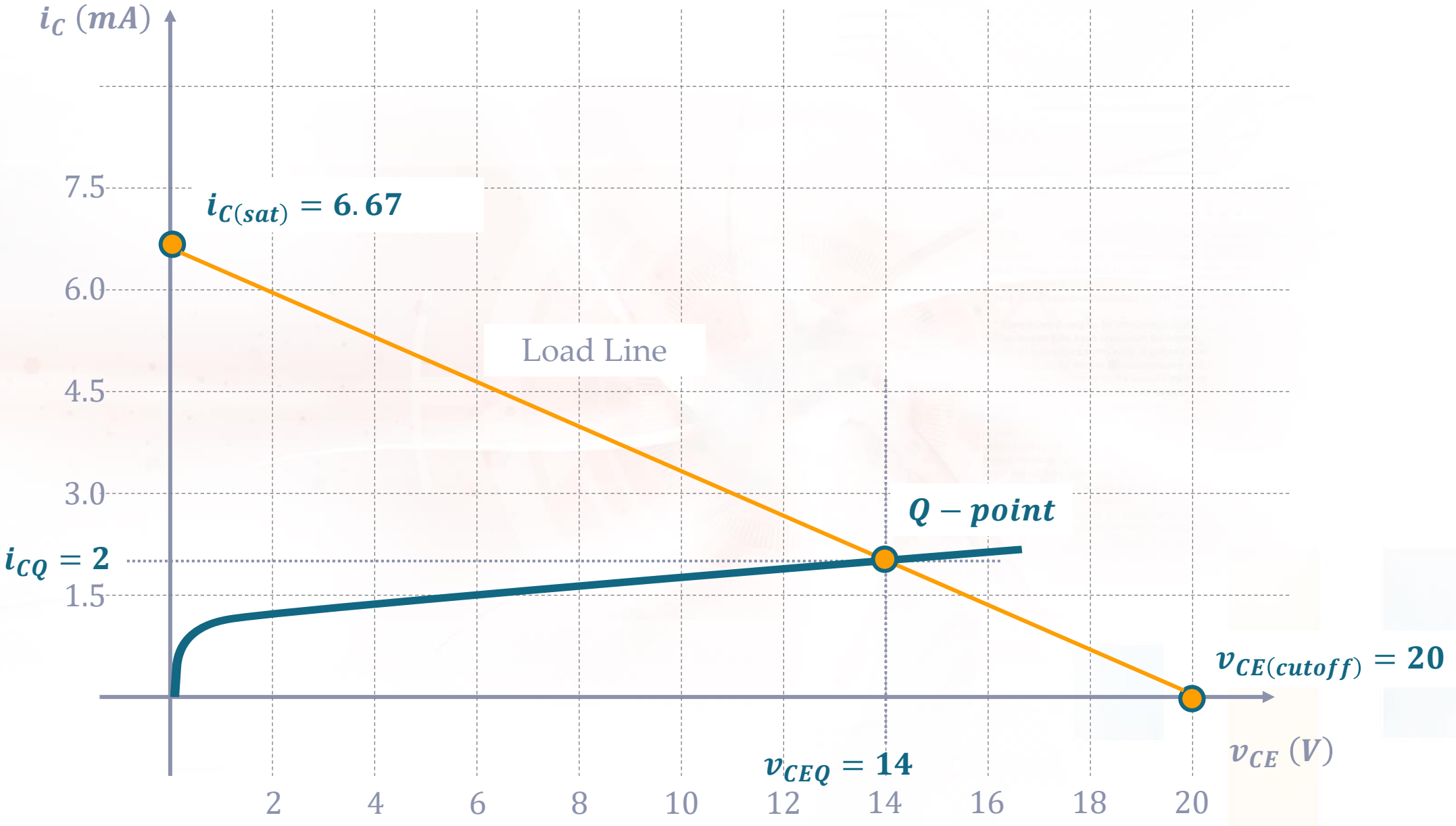

IMPROVED BIAS STABILITY

Bias	β	$i_B(\mu A)$	$i_C(mA)$	$V_{CE}(V)$	$\%\Delta V_{CE}$
Fixed-Biased	50	47.1	2.3	6.8	-76%
	100	47.1	4.7	1.6	
Emitter Stabilized	**50**	**40.1**	**2.0**	**14.0**	**-35%**
	100	**36.3**	**3.6**	**9.1**	

LABORATORY